# M-10*i*D/8L

Max. load capacity at wrist: **8 kg**

Max. reach: **2032 mm**

| Controlled axes | Repeatability (mm) | Mechanical weight (kg) | Motion range (°) | | | | | | Maximum speed (°/s) | | | | | | J4 Moment/ Inertia (Nm/kgm2) | J5 Moment/ Inertia (Nm/kgm2) | J6 Moment/ Inertia (Nm/kgm2) |
|---|---|---|---|---|---|---|---|---|---|---|---|---|---|---|---|---|---|
| | | | J1 | J2 | J3 | J4 | J5 | J6 | J1 | J2 | J3 | J4 | J5 | J6 | | | |
| 6 | ± 0.03* | 180 | 340 (370) | 235 | 455 | 380 | 280 (360) *21) | 540 (900) *21) | 210 | 210 | 220 | 430 | 450 | 720 | 16.1/0.63 | 16.1/0.63 | 5.9/0.061 |

**Working range**

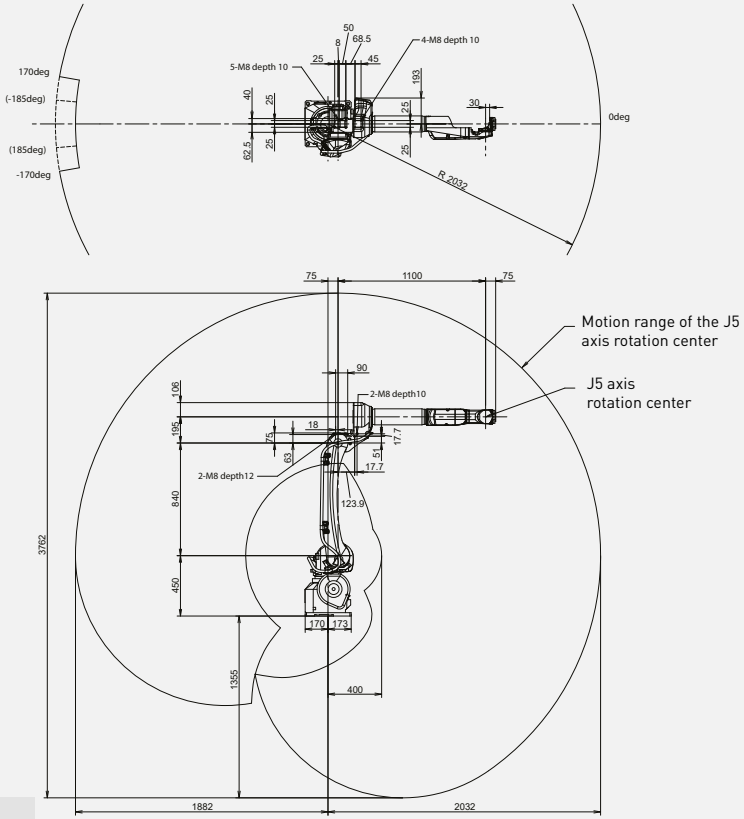


Motion range may be restricted according to the mounting angle!

| **Robot** | **M-10*i*D/8L** |
|---|---|
| Robot footprint [mm] | 343 x 343 |
| Mounting position Floor | ● |
| Mounting position Upside down | ● |
| Mounting position Angle | ● |
| **Controller** | **R-30*i*B Plus** |
| Open air cabinet | - |
| Mate cabinet | ○ |
| A-cabinet | ● |
| B-cabinet | ○ |
| *i*Pendant Touch | ● |
| **Electrical connections** | |
| Voltage 50/60Hz 3phase [V] | 380-575 |
| Voltage 50/60Hz 1phase [V] | - |
| Average power consumption [kW] | 1 |
| **Integrated services** | |
| Integrated signals on upper arm In/Out | 8/8 |
| Integrated air supply | 1 |
| **Environment** | |
| Acoustic noise level [dB] | 57.4 |
| Ambient temperature [° C] | 0-45 |
| **Protection** | |
| Body standard/optional | IP54 |
| Wrist & J3 arm standard/optional | IP67 |

* 21) Extended range for external cable type

● standard ○ on request - not available [ ] with hardware and/or software option

*Based on ISO9283


Technical information subject to changes without prior notice. All rights reserved. ©2023 FANUC Europe Corporation