M-800*i*A/60

Max. load capacity at wrist: **60 kg**

Max. reach: **2040 mm**

Controlled axes	Repeatability (mm)	Mechanical weight (kg)	Motion range (°)						Maximum speed (°/s)						J4 Moment/ Inertia (Nm/kgm2)	J5 Moment/ Inertia (Nm/kgm2)	J6 Moment/ Inertia (Nm/kgm2)
			J1	J2	J3	J4	J5	J6	J1	J2	J3	J4	J5	J6			
6	± 0.015*	820	370	225	340	720	250	720	150	150	150	260	260	400	210/30	210/30	130/20

Working range

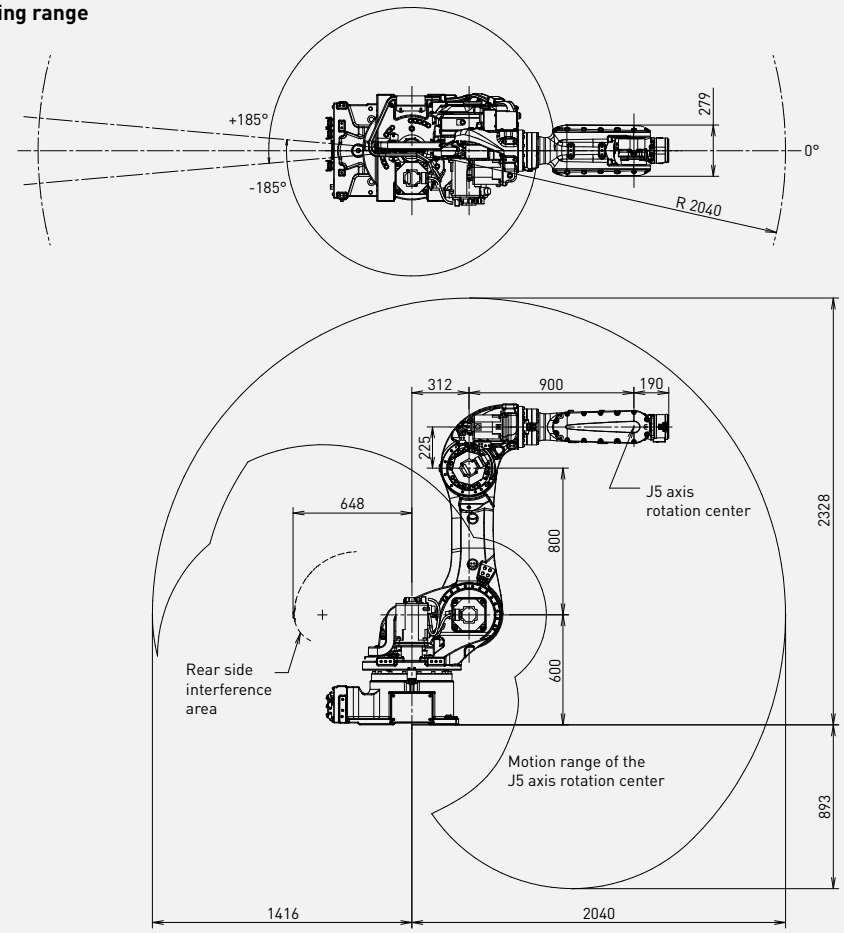

Robot	**M-800*i*A/60**
Robot footprint [mm]	515 x 505
Mounting position Floor	●
Mounting position Upside down	●
Mounting position Angle	-
Controller	**R-30*i*B Plus**
Open air cabinet	-
Mate cabinet	-
A-cabinet	●
B-cabinet	○
*i*Pendant Touch	●
Electrical connections	
Voltage 50/60Hz 3phase [V]	380-575
Voltage 50/60Hz 1phase [V]	-
Average power consumption [kW]	
Integrated services	
Integrated signals on upper arm In/Out	8/8
Integrated air supply	1
Environment	
Acoustic noise level [dB]	70
Ambient temperature [° C]	0-45
Protection	
Body standard/optional	IP54
Wrist & J3 arm standard/optional	IP54

● standard ○ on request - not available [ ] with hardware and/or software option

*Based on ISO9283

Technical information subject to changes without prior notice. All rights reserved. ©2024 FANUC Europe Corporation