ARC Mate 100*i*D/8L

Max. load capacity at wrist: **8 kg**

Max. reach: **2032 mm**

Controlled axes	Repeatability (mm)	Mechanical weight (kg)	Motion range (°)						Maximum speed (°/s)						J4 Moment/ Inertia (Nm/kgm2)	J5 Moment/ Inertia (Nm/kgm2)	J6 Moment/ Inertia (Nm/kgm2)
			J1	J2	J3	J4	J5	J6	J1	J2	J3	J4	J5	J6			
6	± 0.03*	180	340 (370)	235	455	380	280 (360)*21)	540 (900)*21)	210	210	220	430	450	720	16.1/0.63	16.1/0.63	5.9/0.061

Working range

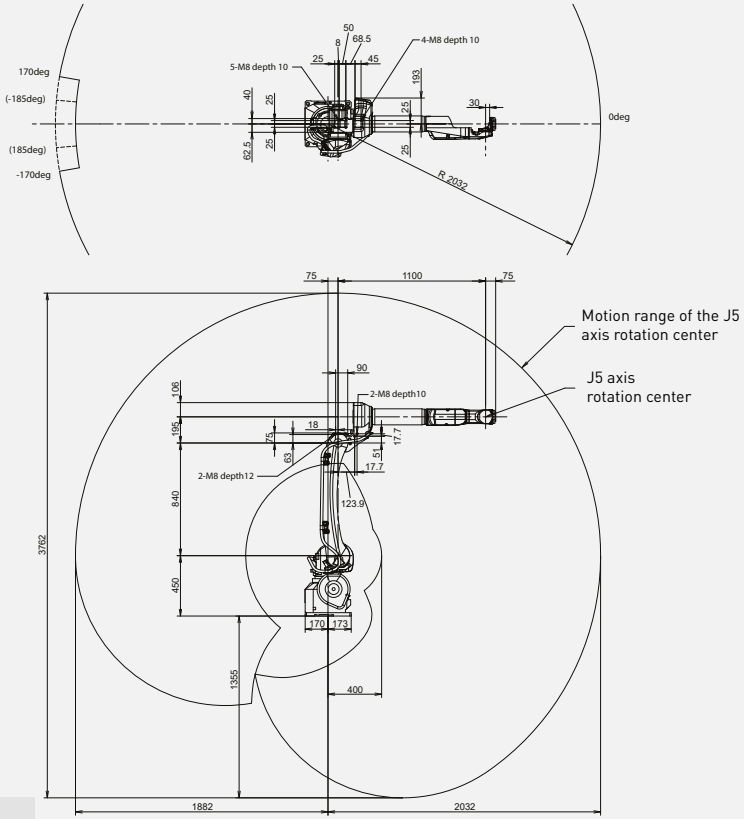

Motion range may be restricted according to the mounting angle!

Robot	**ARC Mate 100*i*D/8L**
Robot footprint [mm]	343 x 343
Mounting position Floor	●
Mounting position Upside down	●
Mounting position Angle	●
Controller	**R-30*i*B Plus**
Open air cabinet	-
Mate cabinet	○
A-cabinet	●
B-cabinet	○
*i*Pendant Touch	●
Electrical connections	
Voltage 50/60Hz 3phase [V]	380-575
Voltage 50/60Hz 1phase [V]	-
Average power consumption [kW]	1
Integrated services	
Integrated signals on upper arm In/Out	1/1
Integrated air supply	1
Environment	
Acoustic noise level [dB]	57.4
Ambient temperature [° C]	0-45
Protection	
Body standard/optional	IP54
Wrist & J3 arm standard/optional	IP67

*21) Extended range for external cable type

● standard ○ on request - not available [ ] with hardware and/or software option

*Based on ISO9283

Technical information subject to changes without prior notice. All rights reserved. ©2023 FANUC Europe Corporation